Attachment A

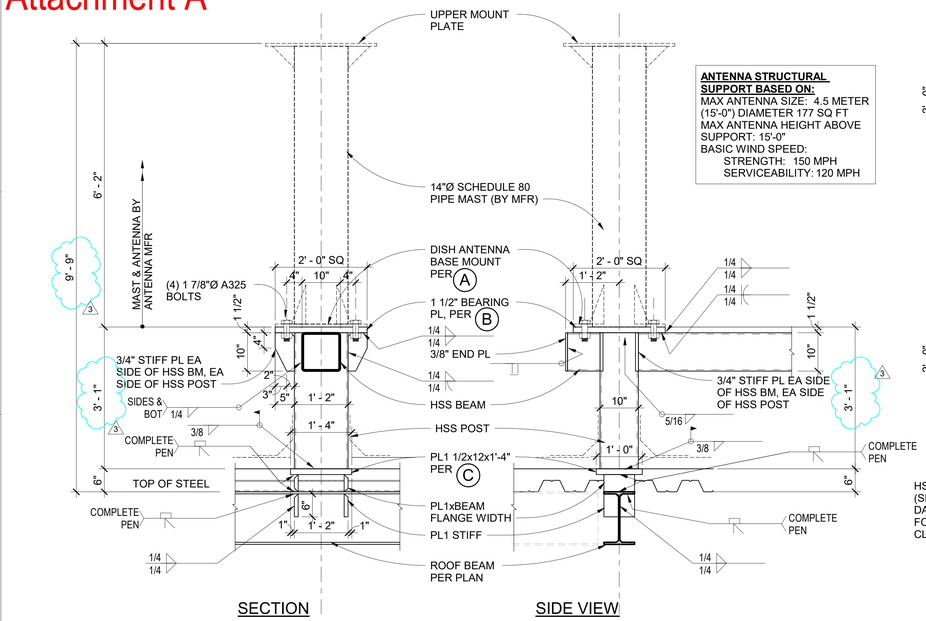

ANTENNA STRUCTURAL SUPPORT BASED ON:
MAX ANTENNA SIZE: 4.5 METER (15'-0") DIAMETER 177 SQ FT
MAX ANTENNA HEIGHT ABOVE SUPPORT: 15'-0"
BASIC WIND SPEED:
STRENGTH: 150 MPH
SERVICEABILITY: 120 MPH

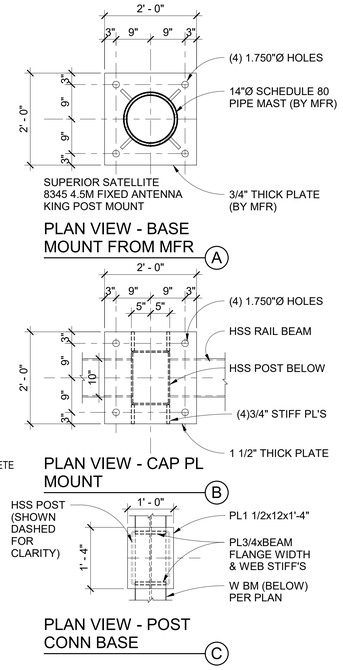

1 DISH ANTENNA SUPPORT RAIL (SERIES SSE8345 4.5M FIXED EARTH STATION ANTENNA)
3/4" = 1'-0"

ANTENNA STRUCTURAL SUPPORT BASED ON:
MAX ANTENNA SIZE: 3 METER (10'-0") DIAMETER 79 SQ FT
MAX ANTENNA HEIGHT ABOVE SUPPORT: 12'-0"
BASIC WIND SPEED:
STRENGTH: 150 MPH
SERVICEABILITY: 120 MPH

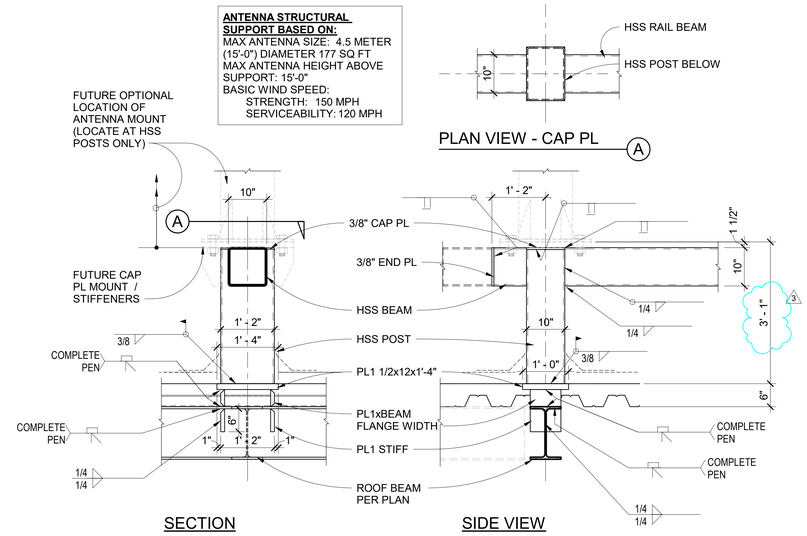

2 SUPPORT RAIL POST (NO ANTENNA MOUNT / FUTURE OPTIONAL ANTENNA MOUNT)
3/4" = 1'-0"

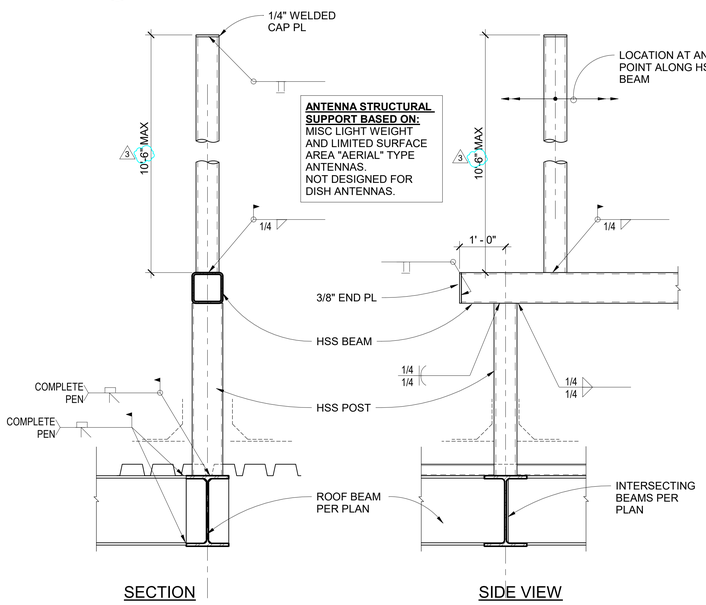

ANTENNA STRUCTURAL SUPPORT BASED ON:
MISC LIGHT WEIGHT AND LIMITED SURFACE AREA "AERIAL" TYPE ANTENNAS.
NOT DESIGNED FOR DISH ANTENNAS.

3 MAST ANTENNA SUPPORT RAIL (HIGH ROOF)
3/4" = 1'-0"

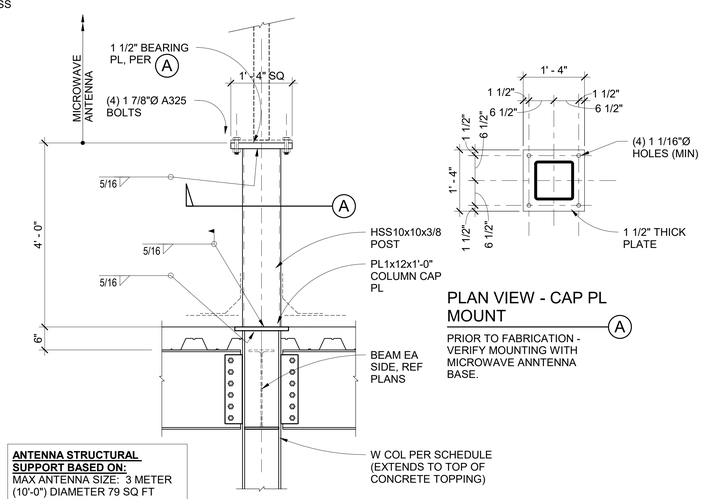

PRIOR TO FABRICATION - VERIFY MOUNTING WITH MICROWAVE ANNTENNA BASE.

ANTENNA STRUCTURAL SUPPORT BASED ON:
MAX ANTENNA SIZE: 3 METER (10'-0") DIAMETER 79 SQ FT
MAX ANTENNA HEIGHT ABOVE SUPPORT: 12'-0"
BASIC WIND SPEED:
STRENGTH: 150 MPH
SERVICEABILITY: 120 MPH

4 L3 EAST MICROWAVE ANTENNA SUPPORT
3/4" = 1'-0"

ANTENNA STRUCTURAL SUPPORT BASED ON:
MAX ANTENNA SIZE: 3 METER (10'-0") DIAMETER 79 SQ FT
MAX ANTENNA HEIGHT ABOVE SUPPORT: 12'-0"
BASIC WIND SPEED:
STRENGTH: 150 MPH
SERVICEABILITY: 120 MPH

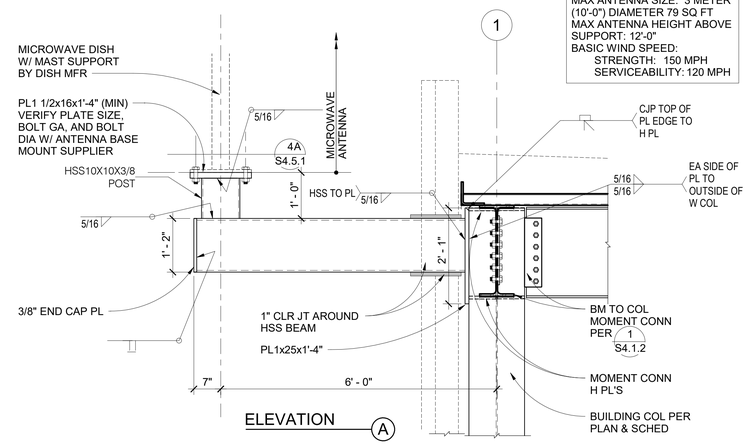

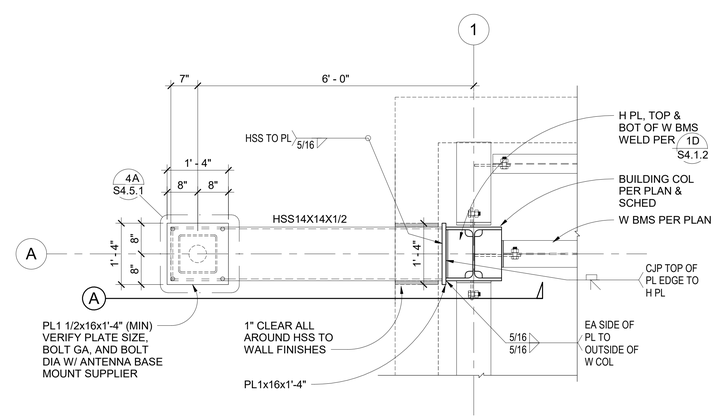

5 PLAN VIEW - MICROWAVE ANTENNA
3/4" = 1'-0"

THE UNIVERSITY OF ARIZONA
ARIZONA PUBLIC MEDIA FACILITY
2685 S. CATALYST DR.
TUCSON, AZ 85713

DPR CONSTRUCTION
DPR CONSTRUCTION
222 N 44TH ST, PHOENIX, AZ 85034
602.808.0500
dpr.com

SMITHGROUP
455 NORTH THIRD STREET
SUITE 250
PHOENIX, AZ 85004
602.265.2200
smithgroup.com

swaim ASSOCIATES LTD ARCHITECTS AIA
SWAIM ASSOCIATES
7350 E SPEEDEWAY BLVD, SUITE 210
TUCSON, AZ 85710
520.326.3700
swaimaia.com

RBDG Russ Berger Design Group
RUSS BERGER DESIGN GROUP
3300 DALLAS PKWY, SUITE 200
PLANO, TX 75093
972.661.5222
rbdg.com

ISSUED FOR	REV	DATE
ASI 3	3	11 JAN 2024
PERMIT SUBMITTAL		21 AUG 2023

SEALS AND SIGNATURES

SHEET TITLE
ANTENNA SUPPORT DETAILS

PROJECT NUMBER 13723 / 22-9576

CD

SHEET NUMBER S4.5.1

MARTIN WHITE GRIFFIS STRUCTURAL ENGINEERS, INC.

Plot Date: 1/11/2024 10:34:36 AM ERW