Attachment B

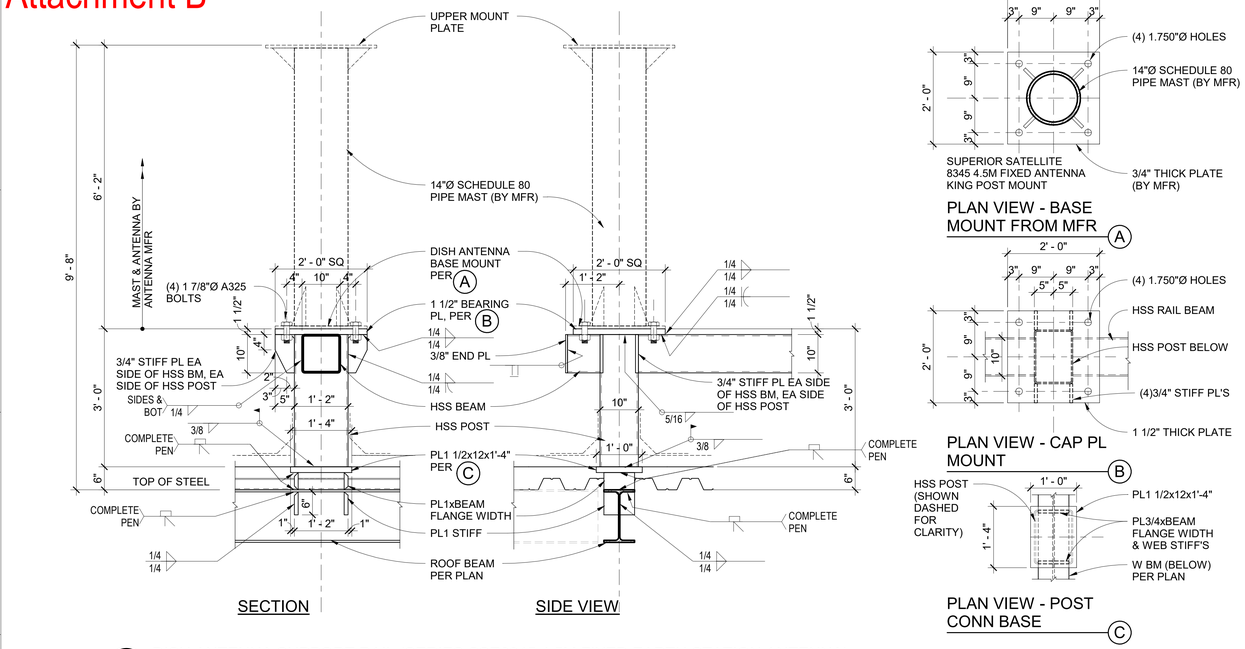

1 DISH ANTENNA SUPPORT RAIL (SERIES SSE8345 4.5M FIXED EARTH STATION ANTENNA)
3/4" = 1'-0"

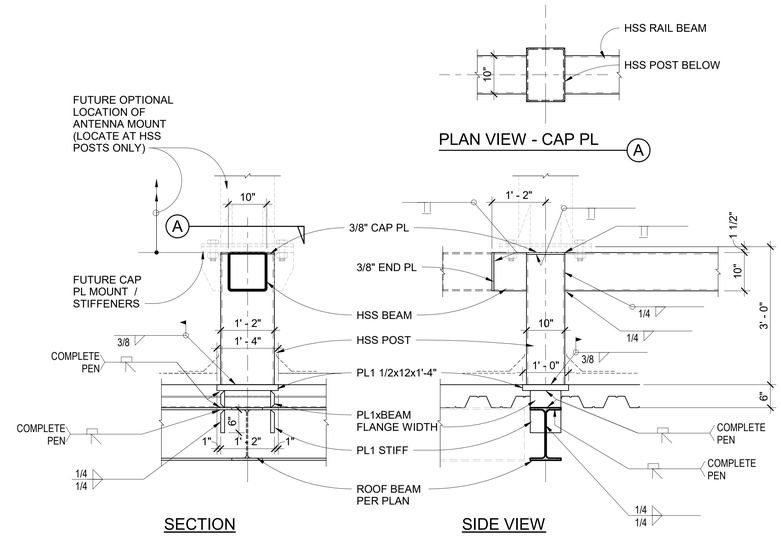

2 SUPPORT RAIL POST (NO ANTENNA MOUNT / FUTURE OPTIONAL ANTENNA MOUNT)
3/4" = 1'-0"

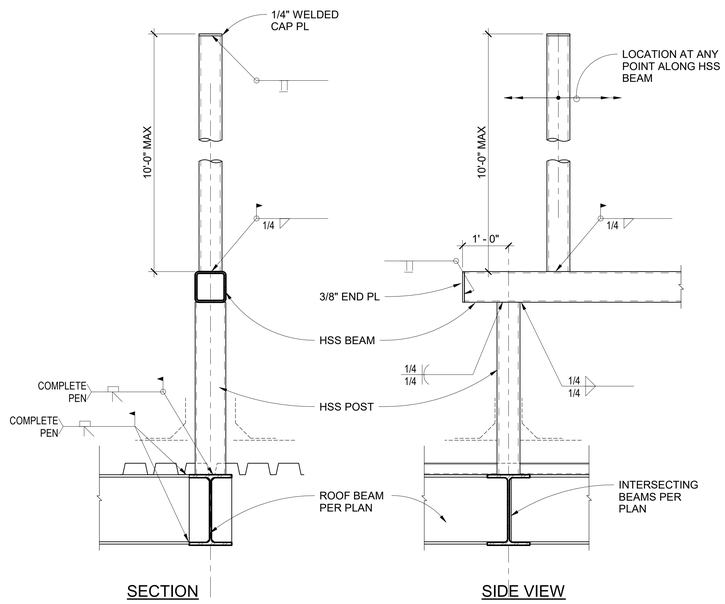

3 MAST ANTENNA SUPPORT RAIL (HIGH ROOF)
3/4" = 1'-0"

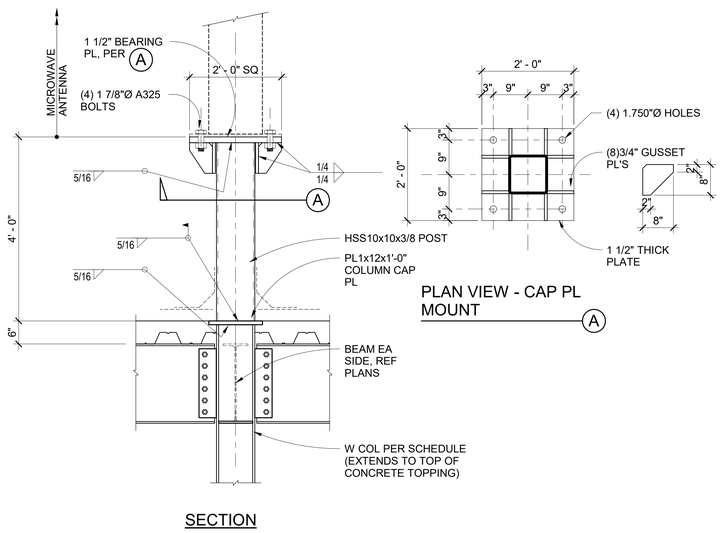

4 L3 EAST MICROWAVE ANTENNA SUPPORT
3/4" = 1'-0"

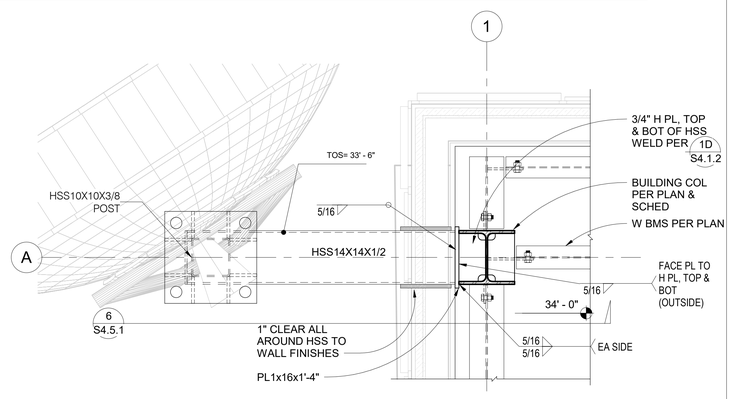

5 PLAN VIEW - L3 WEST MICROWAVE DISH SUPPORT
3/4" = 1'-0"

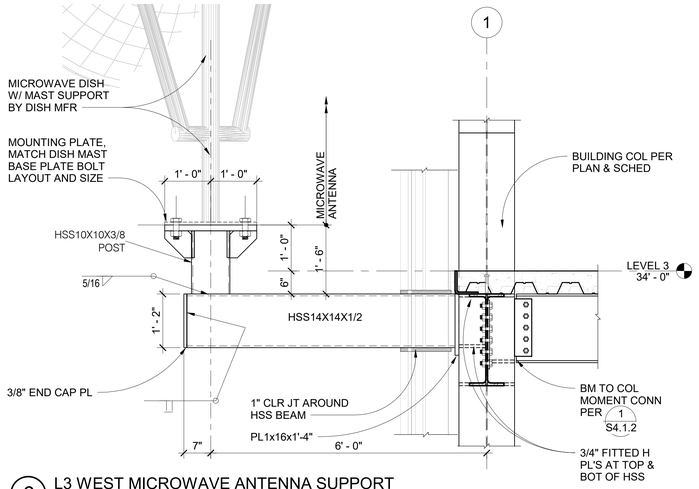

6 L3 WEST MICROWAVE ANTENNA SUPPORT
3/4" = 1'-0"

GALV NOTE:
ALL EXPOSED STRUCTURAL STEEL TO BE HOT-DIPPED GALVANIZED.

THE UNIVERSITY OF ARIZONA
ARIZONA PUBLIC MEDIA FACILITY
2685 S. CATALYST DR.
TUCSON, AZ 85713

DPR CONSTRUCTION
DPR CONSTRUCTION
222 N 44TH ST, PHOENIX, AZ 85034
602.808.0500
dpr.com

SMITHGROUP
455 NORTH THIRD STREET
SUITE 250
PHOENIX, AZ 85004
602.265.2200
smithgroup.com

swaim ASSOCIATES LTD ARCHITECTS AIA
SWAIM ASSOCIATES
7350 E SPEEDEWAY BLVD, SUITE 210
TUCSON, AZ 85710
520.326.3700
swaimaia.com

RBDG Russ Berger Design Group
RUSS BERGER DESIGN GROUP
3300 DALLAS PKWY, SUITE 200
PLANO, TX 75093
972.661.5222
rbdg.com

ISSUED FOR	REV	DATE
50% Construction Documents		02 FEB 2023
Design Development		23 NOV 2022

SEALS AND SIGNATURES

NOT FOR CONSTRUCTION

SHEET TITLE
STRUCTURAL DETAILS

PROJECT NUMBER 13723 / 22-9576

CD

SHEET NUMBER S4.5.1

MARTIN WHITE GRIFFIS STRUCTURAL ENGINEERS, INC.

Plot Date: 2/2/2023 11:28:15 AM ERW